200W Single Output Series - with PFC

- Universal AC input / full range
- PF>0.98@115VAC; >0.95@230VAC
- Built in fan speed control

- Protections: over current/ over voltage/ over temperature/ short circuit
- 2 years warranty
- N620C 199 x 99 x 50(mm)

AC input voltage range ..... 85~264VAC (120~370VDC)
Input frequency ..... 47~63Hz
Inrush current ..... cold start, 20A/115V, 40A/230V
Input leakage current ..... ＜0.7mA/ 230VAC
Line regulation (full load) ..... ≤±0.5%
Output voltage adjust range ..... ±10%
Output over current protection ..... 110~130%, current limiting, auto recovery
Output over voltage protection ..... 115~150%
Withstand voltage ..... I/P -O/P: 3.0KVAC/1min
I/P -F/G: 1.5KVAC/1min
O/P-F/G: 0.5KVAC/1min
Rise, Hold up time ..... 50ms, 20ms@full load (typical)
Operating temp. & humidity ..... -10℃~+50℃, 20%~93%RH (non condensing)
Storage temp. & humidity ..... -20℃~+85℃, 20%~95%RH (non condensing)
Safety standards GB4943, UL60950, EN60950
EMC standards ..... GB9254, EN55022 classB
EN61000-3-2,3, EN61000-4-2,3,4,5,6,8,11
Cooling method ..... fan

Model	DC Output		Load regul.	R&N	Efficiency
NO200W-SC-3.3	3.3V	40.0A	0.5%	100mV	65%
NO200W-SC-5	5V	40.0A	0.5%	100mV	71%
NO200W-SC-7.5	7.5V	26.7A	0.5%	100mV	76%
NO200W-SC-12	12V	16.7A	0.5%	100mV	79%
NO200W-SC-13.5	13.5V	15.0A	0.5%	100mV	80%
NO200W-SC-15	15V	13.5A	0.5%	100mV	81%
NO200W-SC-24	24V	8.4A	0.5%	150mV	83%
NO200W-SC-48	48V	4.2A	0.5%	240mV	84%

* 3~48VDC output all available.
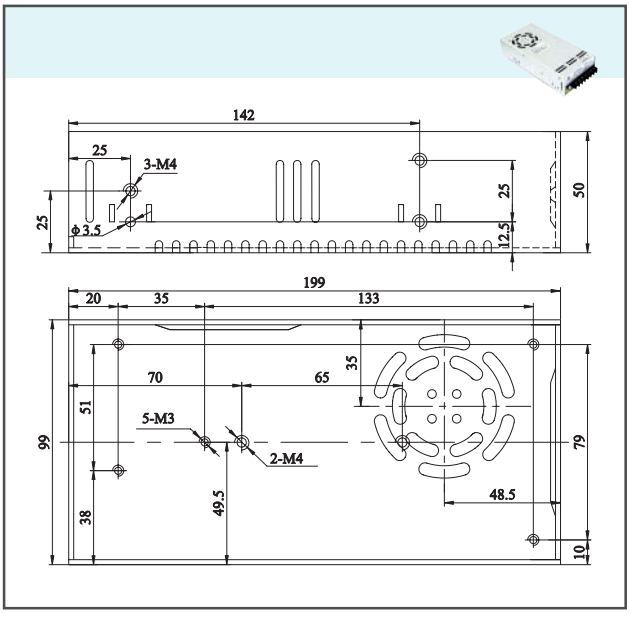
Drawing