300W DC/DC Series

- High reliability
- Built-in fan speed control
- 100% full load burn-in test
- Protections: over current/ over voltage/ over temperature/ short circuit
- 1 year warranty
- N632C 215 x 115 x 50(mm)

DC input voltage 48VDC, 110VDC
Line regulation (full load) ..... ≤±0.5%
Output voltage adjust range ..... ±10%
Output overload protection ..... 110~130%
Output overvoltage protection ..... 115~150%
Withstand voltage ..... I/P -O/P: 1.0KVDC/1min
I/P -F/G: 1.0KVDC/1min
O/P-F/G: 0.5KVDC/1min
Isolation resistance ..... ＞100MΩ@500VDC
Operating temp. & humidity ..... -10℃~+50℃, 20%~90%RH (non condensing)
Storage temp. & humidity ..... -20℃~+85℃, 20%~95%RH (non condensing)
Safety standards ..... design refer to LVD
EMC standards ..... design refer to EN55022, EN61000-4
Cooling method ..... fan

Model	DC Output		Load regul.	R&N	Efficiency
NO300W-SD**-12	12V	25.0A	0.5%	120mV	82%
NO300W-SD**-15	15V	20.0A	0.5%	150mV	83%
NO300W-SD**-24	24V	12.5A	0.5%	200mV	85%
NO300W-SD**-48	48V	6.3A	0.5%	200mV	88%

**means DC input voltage, such as 48, 110, etc.
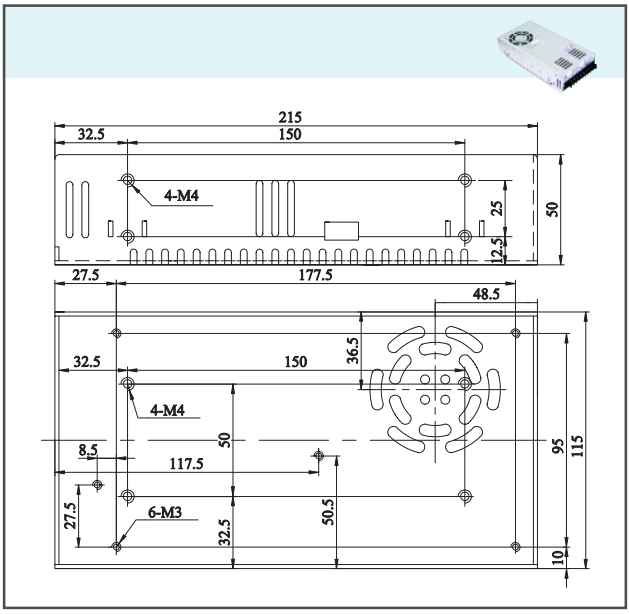
Drawing