30W Single Output Mini-size Series

- Compact size, high reliability
- Built-in EMI filter
- 100% full load burn-in test
- 1 year warranty
- V1 is isolated from the other outputs
- Protections: overload/ short circuit
- N602 111 x 78 x 36(mm)

NO30W-SM□

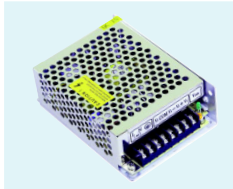

NO30W-DM, TM

AC input voltage range ..... 170~264VAC (210~370VDC)
Inrush current ..... cold start, 40A/230V
Input leakage current ..... ＜0.5mA/ 230VAC
Line regulation (full load) ..... ≤±0.5%
Load regulation ..... V_1: ≤±1%
V_2,V_3: ≤±6%
Output voltage adjust range ..... single output:± 10%, multi-output: V_1:± 5%
Output overload protection ..... 110~150%
Withstand voltage ..... I/P -O/P: 1.5KVAC/1min
I/P -F/G: 1.5KVAC/1min
O/P-F/G: 0.5KVAC/1min
Rise time ..... 50ms@full load (typical)
Hold up time ..... 20ms@full load (typical)
Operating temp. & humidity ..... -10℃~+50℃, 20%~90%RH (non condensing)
Storage temp. & humidity ..... -20℃~+85℃, 20%~95%RH (non condensing)
Safety standards ..... design meet GB4943, UL60950, EN60950
EMC standards ..... design meet GB9254, EN55022 classA
EN61000-3-2,3, EN61000-4-2,3,4,5,6,8,11
Cooling method ..... convection

Single Output

Model	DC Output		Load regul.	R&N	Efficiency
NO30W-SM-5	5V	6.0A	0.5%	80mV	70%
NO30W-SM-12	12V	2.5A	0.5%	100mV	72%
NO30W-SM-15	15V	2.0A	0.5%	100mV	74%
NO30W-SM-24	24V	1.3A	0.5%	150mV	76%
NO30W-SM-48	48V	0.6A	0.5%	150mV	80%

* 3~48VDC output all available.
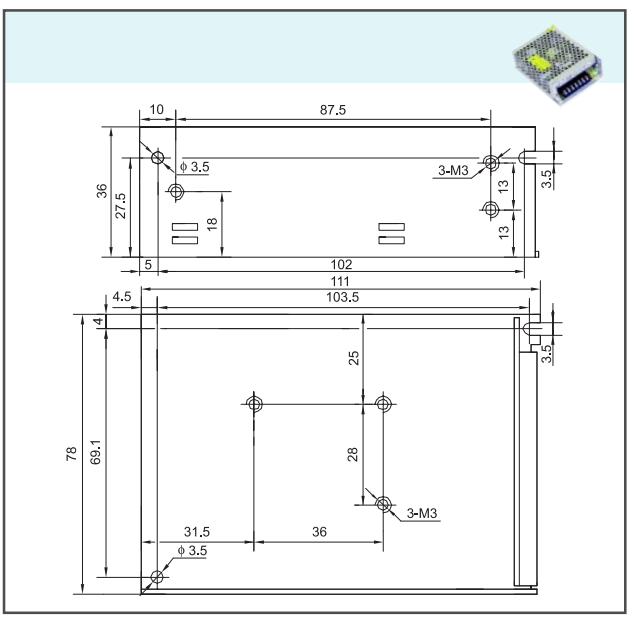
Drawing