50W Dual Output Mini-size Series

- Compact size, high reliability
- Universal AC input / full range
- 100% full load burn-in test
- 2 years warranty
- V1 is isolated from the other outputs
- Protections: overload/ over voltage/ short circuit
- N603 129 x 98 x 40(mm)

NO50W-SML

NO50W-DML, TML

AC input voltage range	85~264VAC (120~370VDC)
Input frequency	47~63Hz
Inrush current	cold start, 20A/115V, 40A/230V
Input leakage current	＜0.7mA/ 230VAC
Line regulation (full load)	≤±0.5%
Load regulation	V_1: ≤± 1% V_2,V_3: ≤± 6%
Output voltage adjust range	single output:± 10%, multi-output: V_1:± 5%
Output overload protection	110~150%
Output over voltage protection	115~150%
Withstand voltage	I/P -O/P: 3.0KVAC/1min I/P -F/G: 1.5KVAC/1min O/P-F/G: 0.5KVAC/1min
Rise time	50ms@full load (typical)
Hold up time	20ms@full load (typical)
Operating temp. & humidity	-10℃~+50℃, 20%~93%RH (non condensing)
Storage temp. & humidity	-20℃~+85℃, 20%~95%RH (non condensing)
Safety standards	meet GB4943, UL60950, EN60950
EMC standards	meet GB9254, EN55022 classB EN61000-3-2,3, EN61000-4-2,3,4,5,6,8,11
Cooling method	convection

Dual Output

Model	DC Output		R&N	Efficiency
NO50W-DML-A	5V	1.0~6.0A	100mV	71%
	12V	0.3~3.0A	120mV	
NO50W-DML-B	5V	1.0~6.0A	100mV	72%
	24V	0.2~2.0A	150mV	
NO50W-DML-C	12V	0.4~2.0A	120mV	74%
	-12V	0.1~2.0A	150mV	
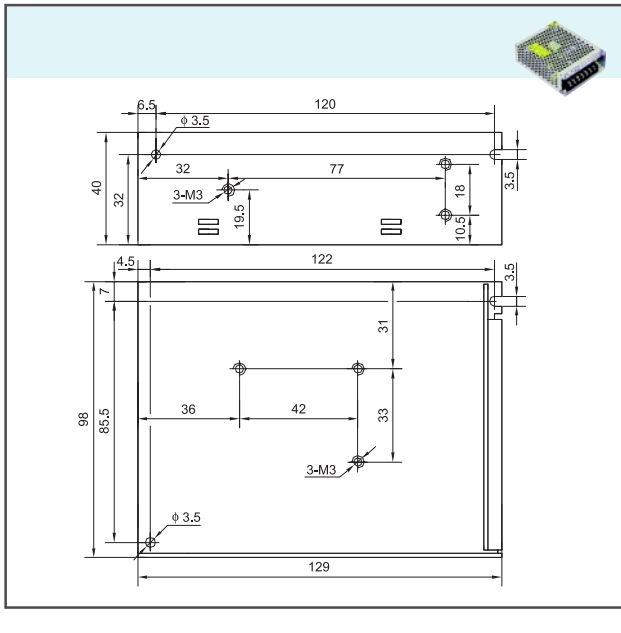
Drawing